Drawing Version 01

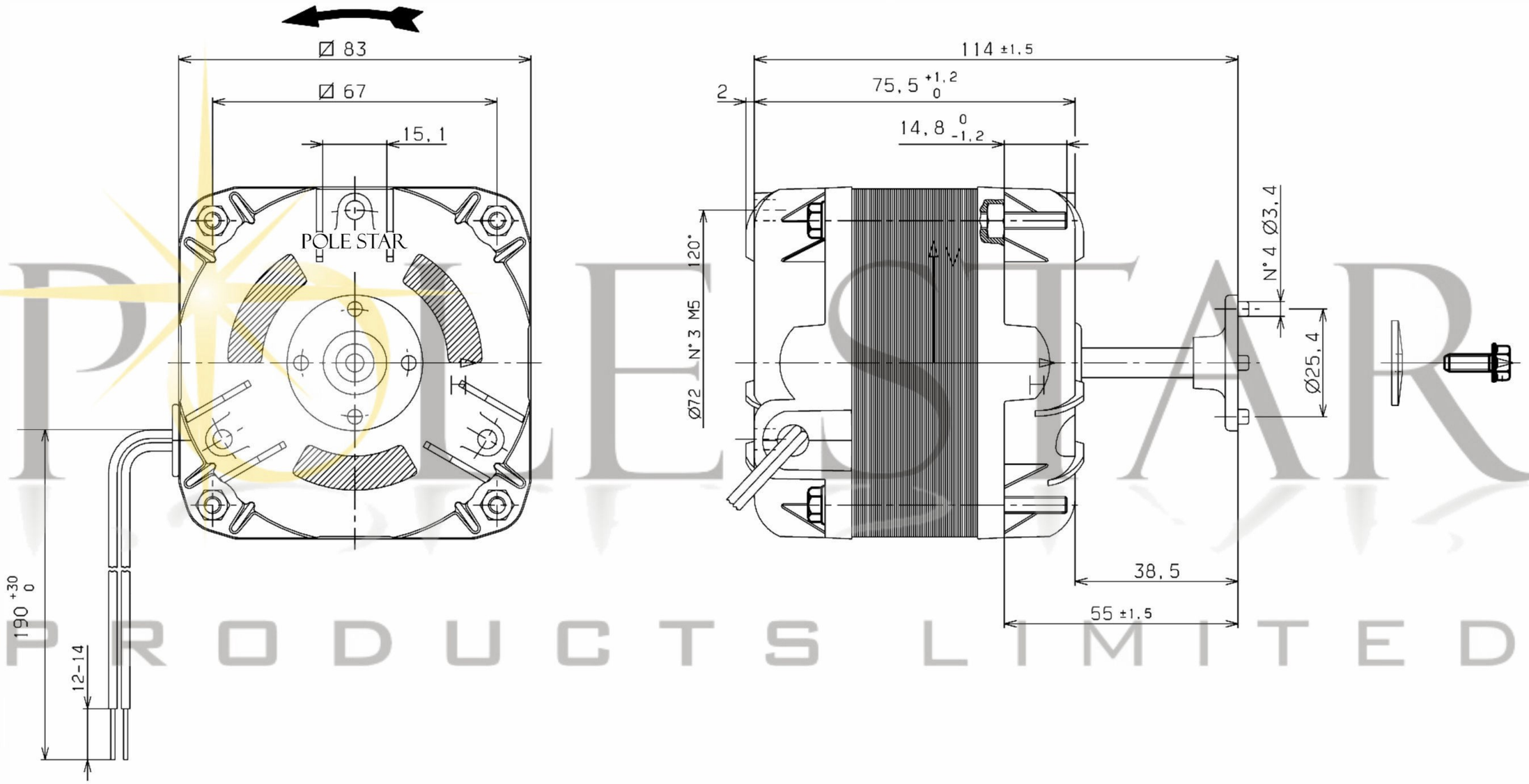

POLE STAR PRODUCTS LIMITED

SPECIFICATION					
Motor	S/P	Speed (RPM)	1300	Bearings	Sleeve
Voltage (V)	230	Motor Protection	Th.Prot	Weight (Kg)	
Frequency (Hz)	50	Insulation Class	B		
Power In/Out (W)	110/25	Protection Class	IP42		
Current (A)	0.75				

POLE STAR
PRODUCTS LIMITED

POLE STAR PRODUCTS LIMITED

Product Code
84FM25S-6

Projection Angle ± 3°

A4

Scale:

Sheet: 1 of