| Drawing Version | 01 |
|---|---|

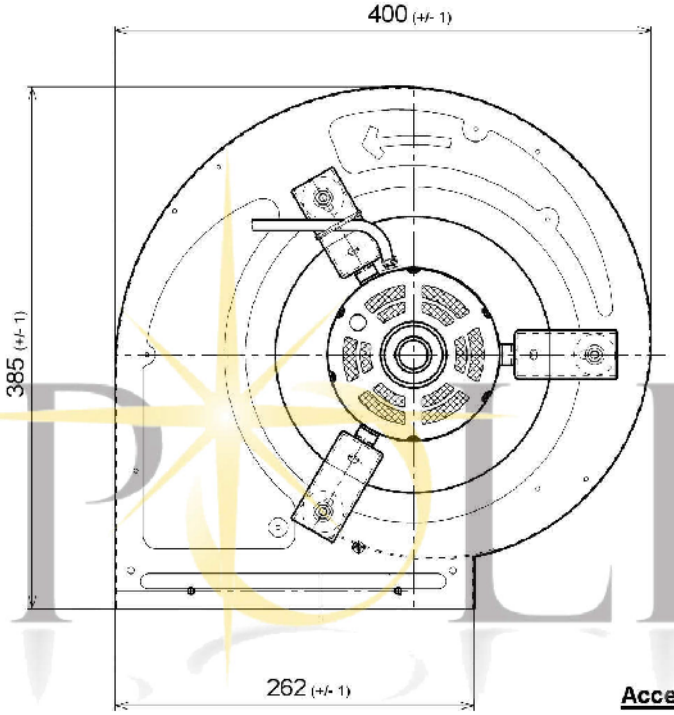


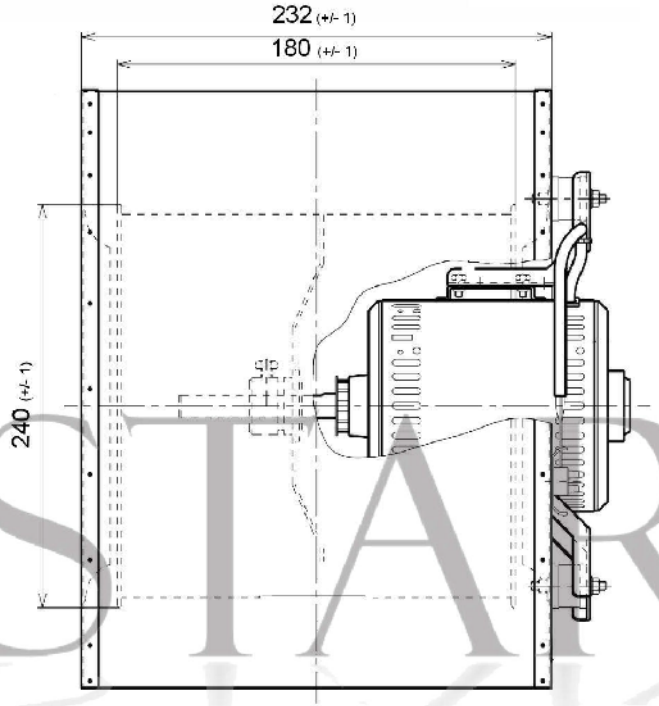


**Accessories - DD9F (Mounting Feet)**

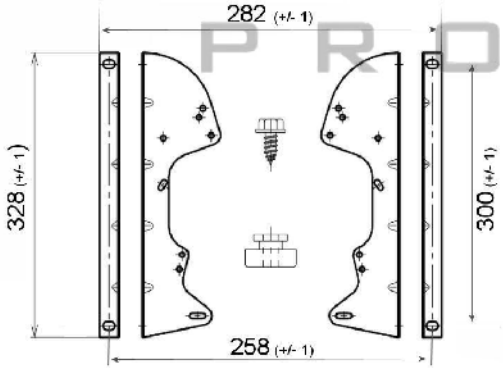


**Accessories - DD9/7 (Flange)**

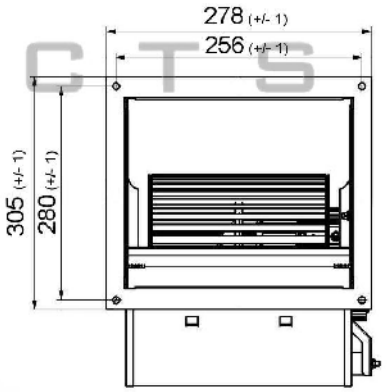


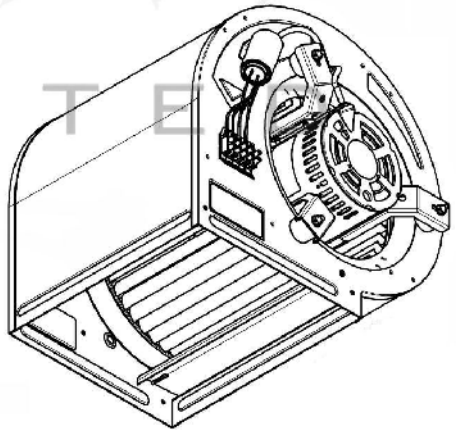

POLE STAR PRODUCTS LIMITED

| SPECIFICATION | | | | | |
|---|---|---|---|---|---|
| Motor | PSC | Speed (RPM) | 1300 | Bearings | Ball |
| Voltage (V) | 230/240 | Motor Protection | Th.Prot | Weight (Kg) | |
| Frequency (Hz) | 50/60 | Insulation Class | B | Air Volume (M³/h) | |
| Power In/Out (W) | 100 | Protection Class | IP42 | Noise Level (dBA) | |
| Current (A) | 1.0 | Capacitor (Mf) | 5.0 | Pressure (Pa) | |

POLE STAR
PRODUCTS LIMITED

POLE STAR PRODUCTS LIMITED

Product Code
DD9/7-F100/1V-1

Projection Angle ± 3°

A4

Scale:

Sheet: 1 of