Drawing Version	01

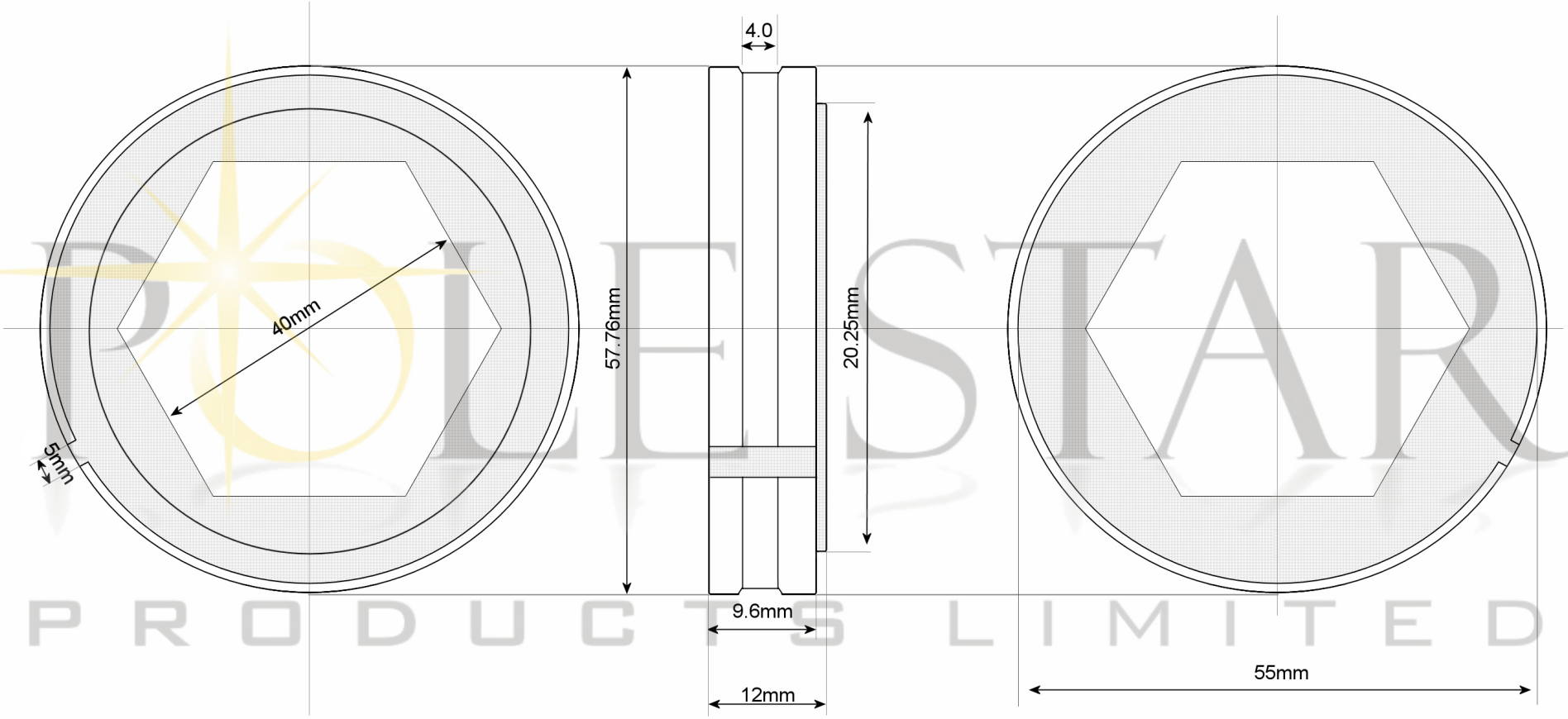

POLE STAR
PRODUCTS LIMITED

SPECIFICATION					
Motor		Speed (RPM)		Bearings	Ball
Voltage (V)		Motor Protection	Th.Prot.	Weight (Kg)	
Frequency (Hz)		Insulation Class	B	Noise dB(A)	
Power In/Out (W)		Protection Class	IP42		
Current (A)		Capacitor (MF)			

POLE STAR
PRODUCTS LIMITED

POLE STAR PRODUCTS LIMITED

Product Code
RR55-12

Projection Angle
± 3°

A4

Scale:

Sheet: 1 of