Model shown is right hand motor

Drawing Version 01

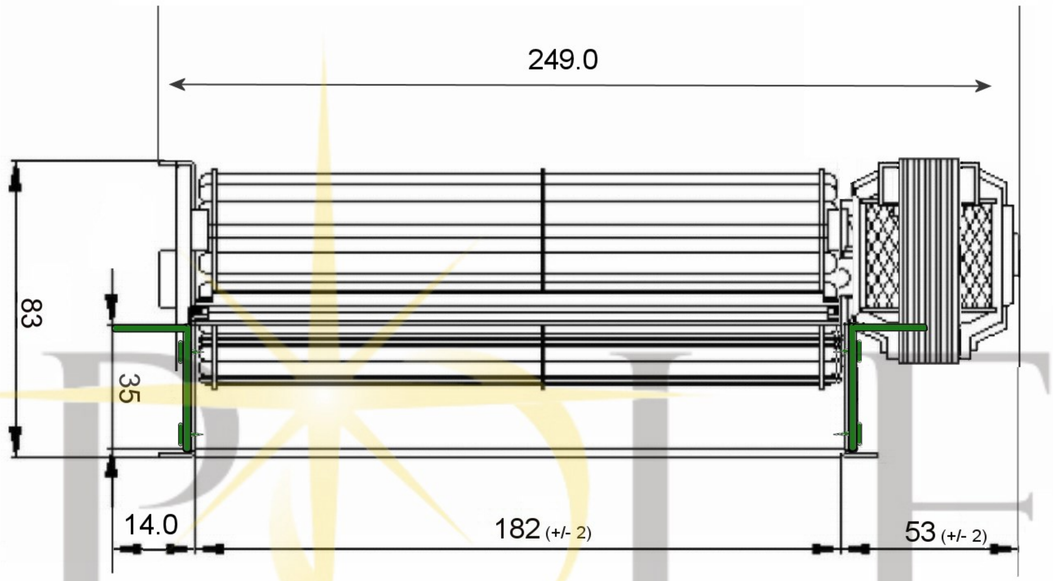

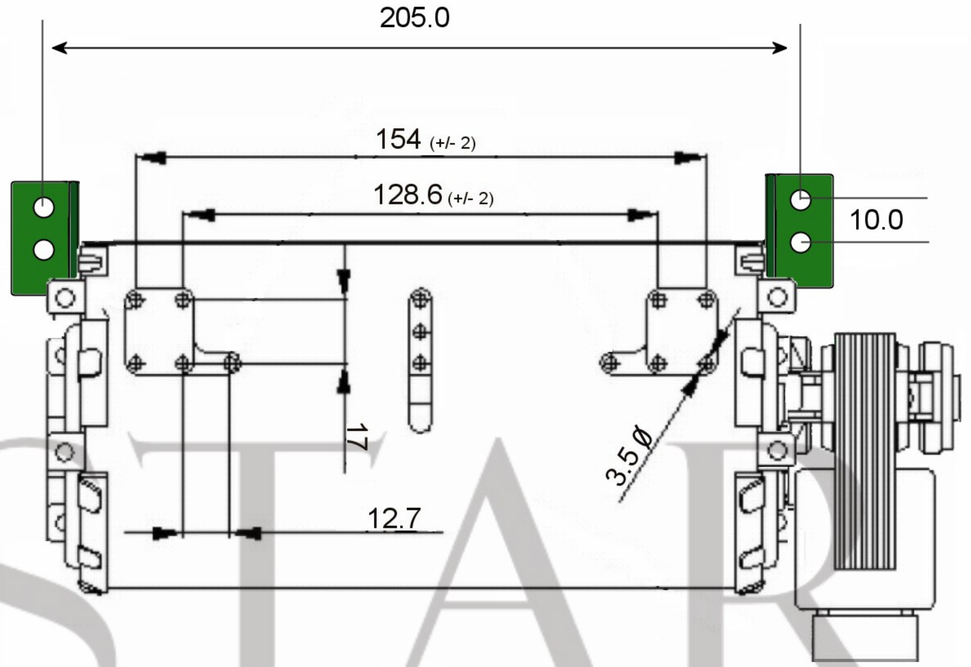

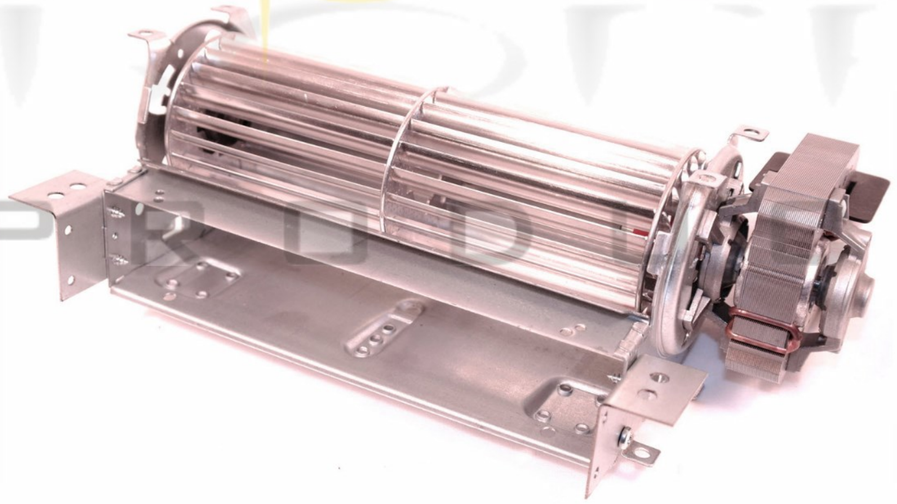

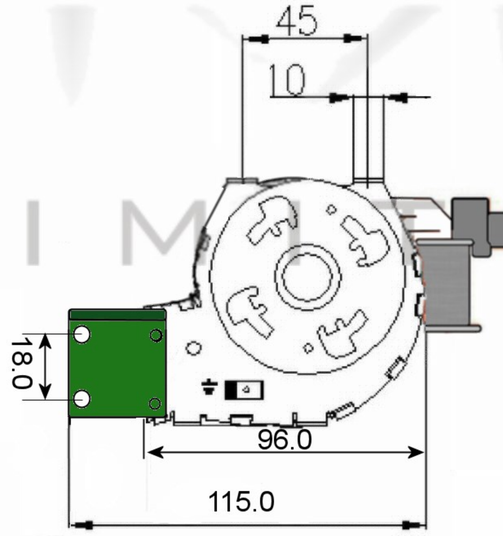

SPECIFICATION	*Temp. Range: 0℃ to + 60℃*				
Motor	SHP	Speed (RPM)	2030	Bearings	Sleeve
Voltage (V)	230/240	Motor Protection	Imp.Prot	Weight (Kg)	0.9
Frequency (Hz)	50	Insulation Class	F	Air Volume (M³/h)	140
Power In/Out (W)	28	Protection Class	IP20	Noise Level (dBA)	
Current (A)		Capacitor (Mf)	N/A	Max Pressure (Pa)	60

POLE STAR
PRODUCTS LIMITED

POLE STAR PRODUCTS LIMITED

Product Code
TAS18R-BKT2

Projection Angle ± 3°

A4
Scale:
Sheet: 1 of

POLE STAR PRODUCTS LIMITED